DXL-60BA2

USHIO

Technical Information
No.0906①

Technical data

Rated Input Power		W	6000
Rated Current		A	160
Useful Power Range		A	110－170
Rated Voltage		V	37.5
Cold Arc Gap		mm	8
Lamp Length (L1)		mm	419.5
Lamp Length (L2)		mm	375.5
LCL (3)		mm	158.5
Bulb Diameter		mm	φ70
Base Diameter		mm	φ30
Cathode pin Diameter		mm	M14×1.5
Anode pin Diameter		mm	φ14
Cable length		mm	156
Vertical		°	±5°
Horizontal		°	±5°
Operating Position	Base Surface Temperature	℃	200℃MAX
	Forced Air Cooling	m/s	

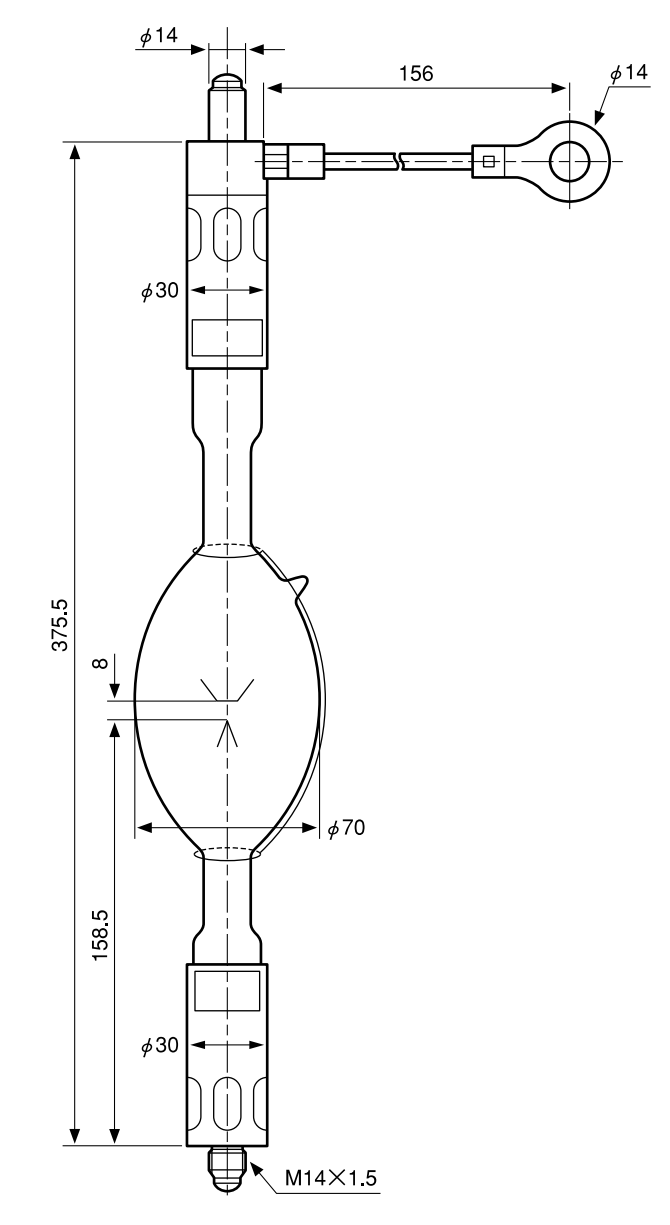

Memo